37.Combination Meter System

A: WIRING DIAGRAM

1. EXCEPT FOR STI MODEL

CM(ES)-01

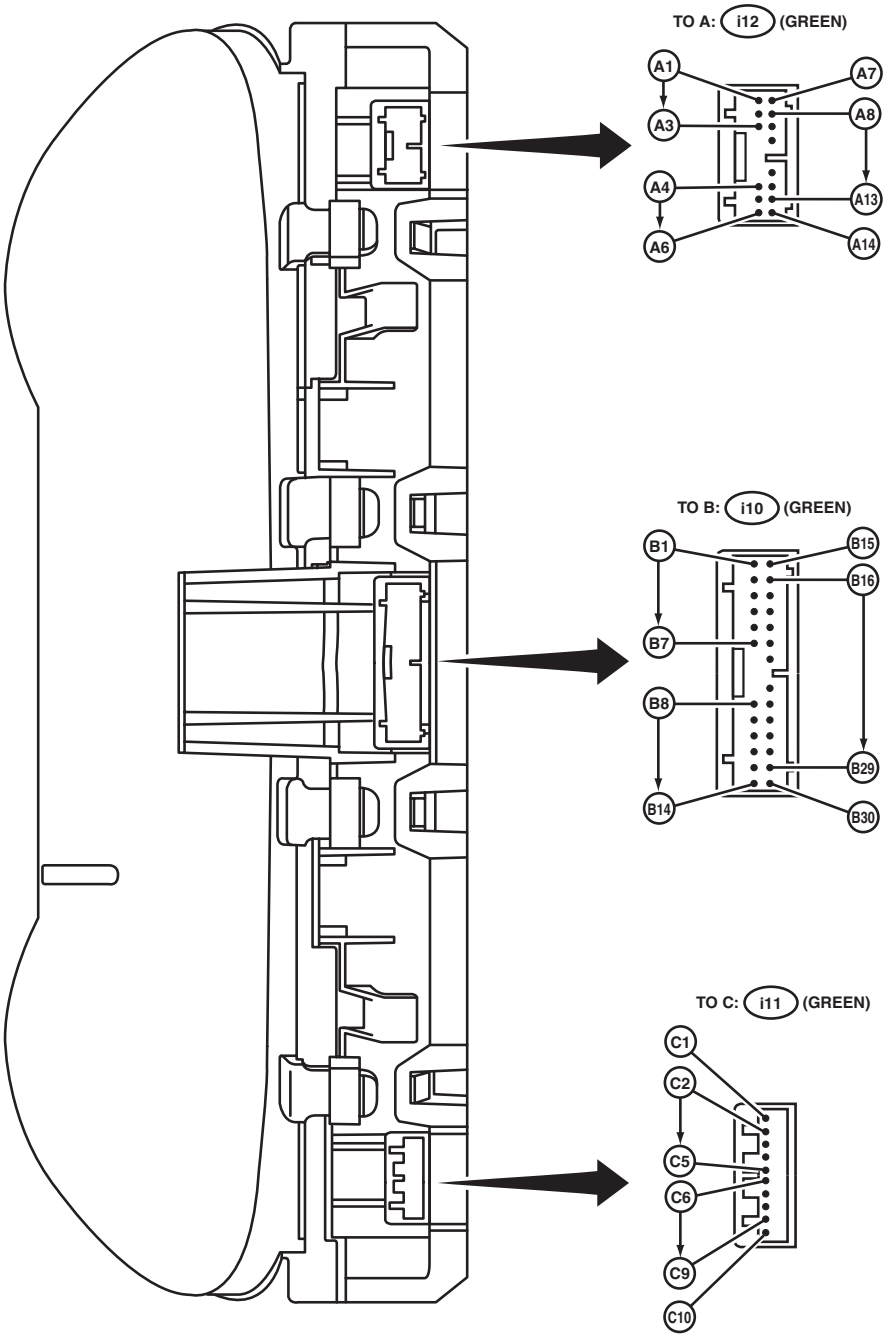

WI-15149

CM(ES)-01

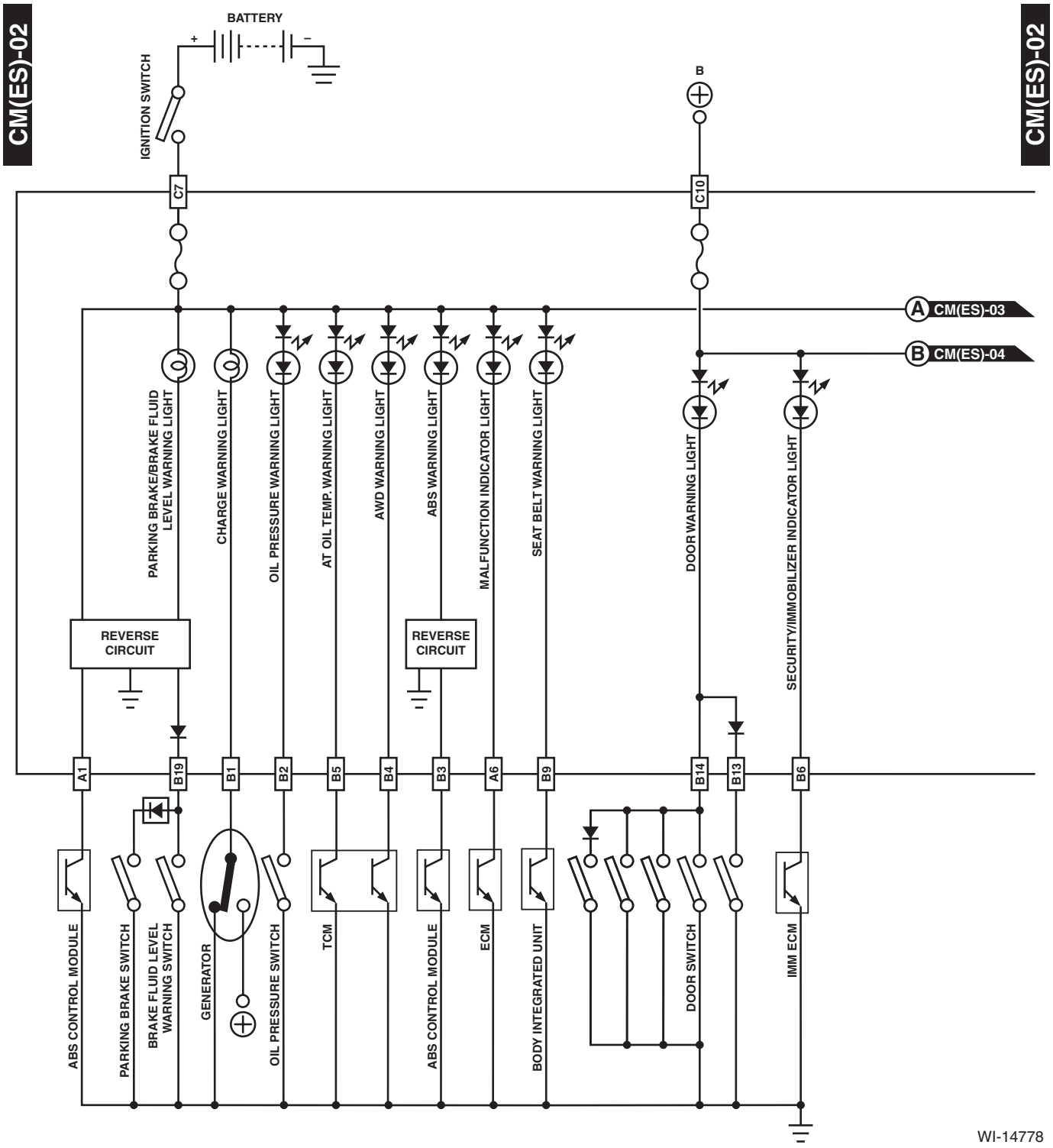
CM(ES)-02
CM(ES)-02
BATTERY
+
–
IGNITION SWITCH
B
C7
C10
A CM(ES)-03
B CM(ES)-04
PARKING BRAKE/BRAKE FLUID LEVEL WARNING LIGHT
CHARGE WARNING LIGHT
OIL PRESSURE WARNING LIGHT
AT OIL TEMP. WARNING LIGHT
AWD WARNING LIGHT
ABS WARNING LIGHT
MALFUNCTION INDICATOR LIGHT
SEAT BELT WARNING LIGHT
DOOR WARNING LIGHT
SECURITY/IMMOBILIZER INDICATOR LIGHT
REVERSE CIRCUIT
REVERSE CIRCUIT
A1
B19
B1
B2
B5
B4
B3
A6
B9
B14
B13
B6
ABS CONTROL MODULE
PARKING BRAKE SWITCH
BRAKE FLUID LEVEL WARNING SWITCH
GENERATOR
OIL PRESSURE SWITCH
TCM
ABS CONTROL MODULE
ECM
BODY INTEGRATED UNIT
DOOR SWITCH
IMM ECM

WI-14778

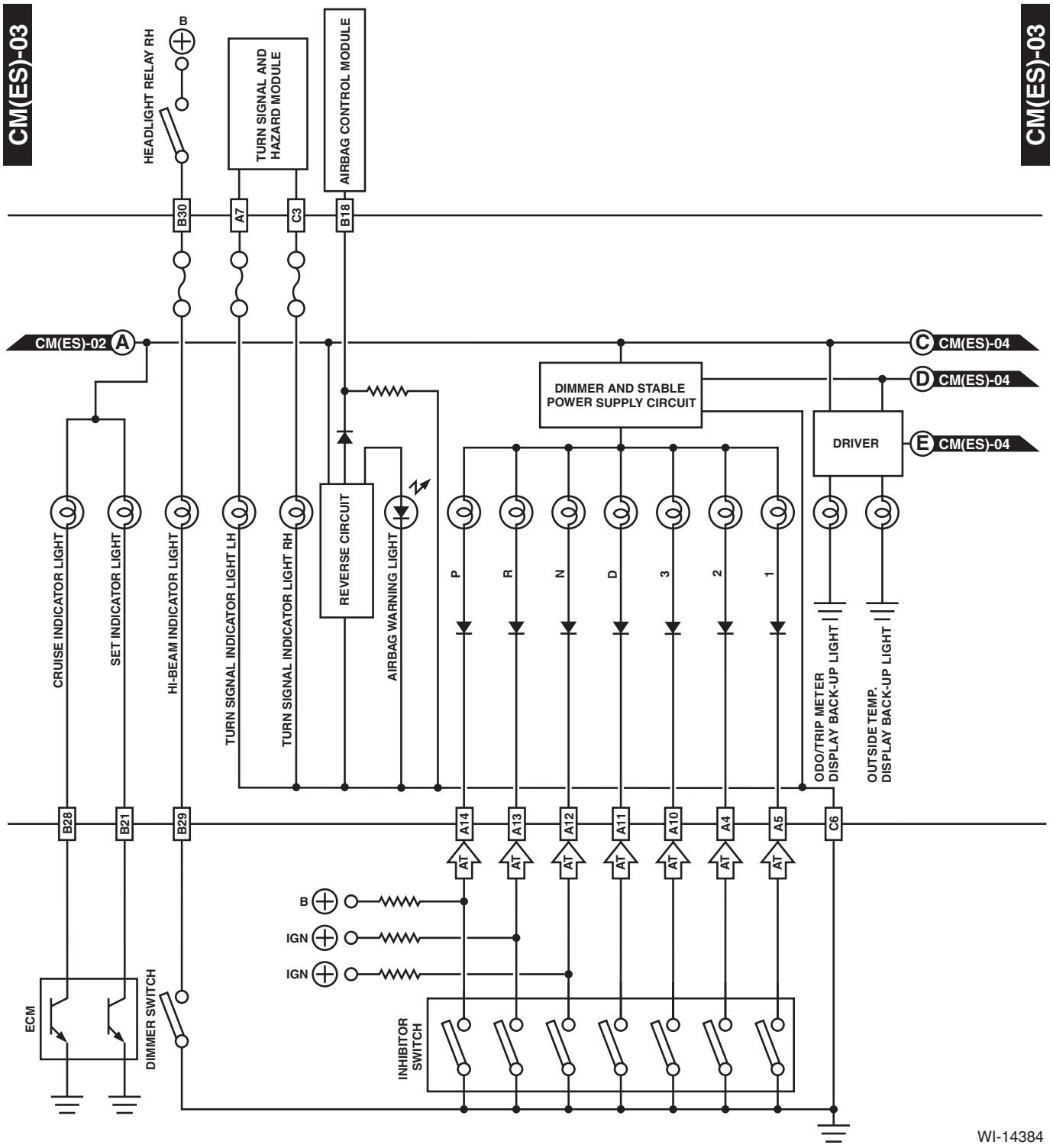
CM(ES)-03
CM(ES)-03
HEADLIGHT RELAY RH
B
TURN SIGNAL AND HAZARD MODULE
AIRBAG CONTROL MODULE
B30
A7
C3
B18
CM(ES)-02 A
C CM(ES)-04
D CM(ES)-04
E CM(ES)-04
DIMMER AND STABLE POWER SUPPLY CIRCUIT
DRIVER
CRUISE INDICATOR LIGHT
SET INDICATOR LIGHT
HI-BEAM INDICATOR LIGHT
TURN SIGNAL INDICATOR LIGHT LH
TURN SIGNAL INDICATOR LIGHT RH
REVERSE CIRCUIT
AIRBAG WARNING LIGHT
P
R
N
D
3
2
1
ODO/TRIP METER DISPLAY BACK-UP LIGHT
OUTSIDE TEMP. DISPLAY BACK-UP LIGHT
B28
B21
B29
A14
A13
A12
A11
A10
A4
A5
C6
AT
B
IGN
IGN
ECM
DIMMER SWITCH
INHIBITOR SWITCH
WI-14384

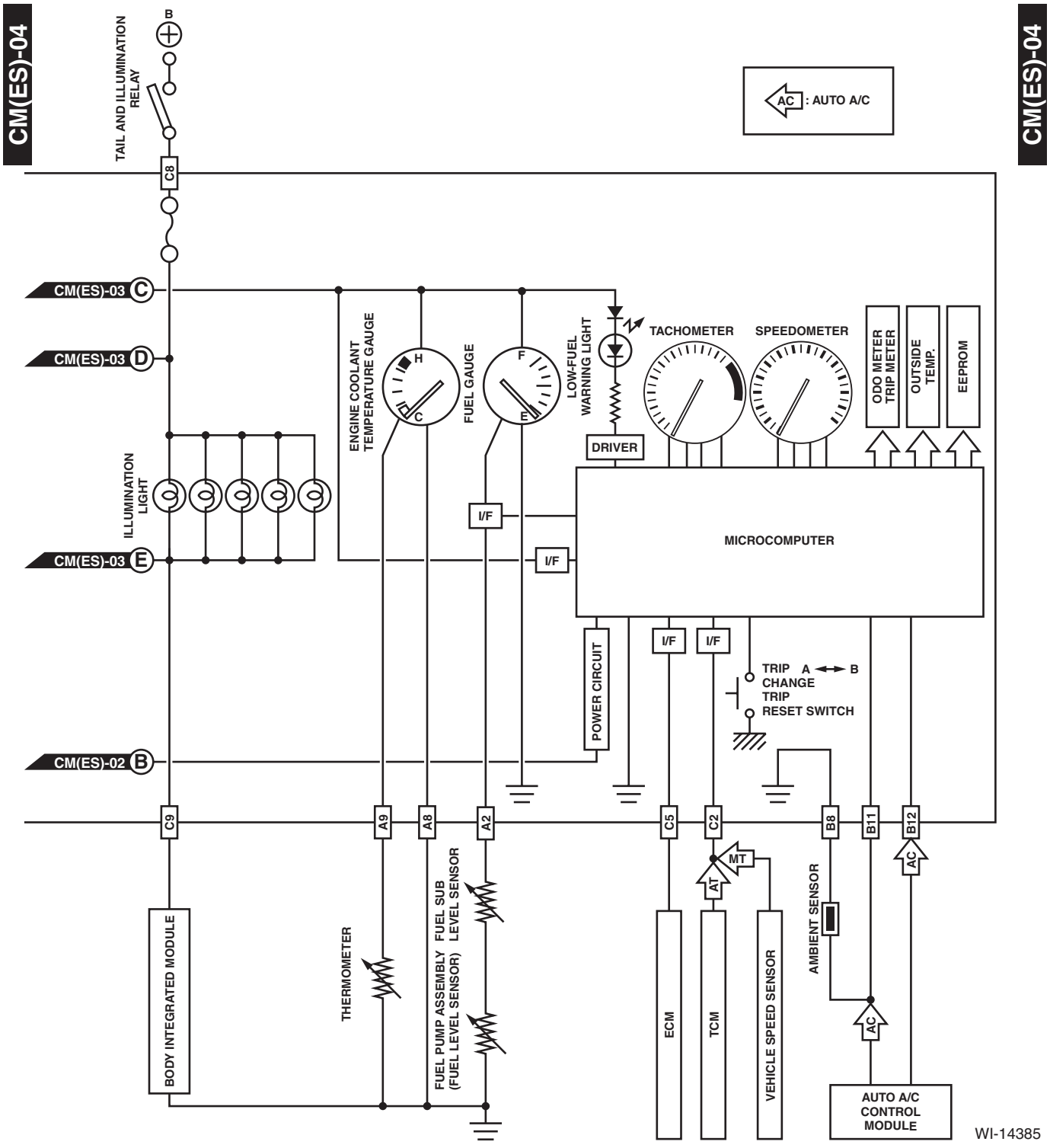
CM(ES)-04
CM(ES)-04
B
TAIL AND ILLUMINATION RELAY
C8
AC : AUTO A/C
CM(ES)-03 C
CM(ES)-03 D
CM(ES)-03 E
CM(ES)-02 B
ILLUMINATION LIGHT
ENGINE COOLANT TEMPERATURE GAUGE
H
C
FUEL GAUGE
F
E
LOW-FUEL WARNING LIGHT
DRIVER
TACHOMETER
SPEEDOMETER
ODO METER TRIP METER
OUTSIDE TEMP.
EEPROM
I/F
MICROCOMPUTER
POWER CIRCUIT
TRIP CHANGE TRIP RESET SWITCH
A
B
C9
A9
A8
A2
C5
C2
B8
B11
B12
MT
AT
AC
BODY INTEGRATED MODULE
THERMOMETER
FUEL PUMP ASSEMBLY (FUEL LEVEL SENSOR)
FUEL SUB LEVEL SENSOR
ECM
TCM
VEHICLE SPEED SENSOR
AMBIENT SENSOR
AUTO A/C CONTROL MODULE
WI-14385

2. STI MODEL

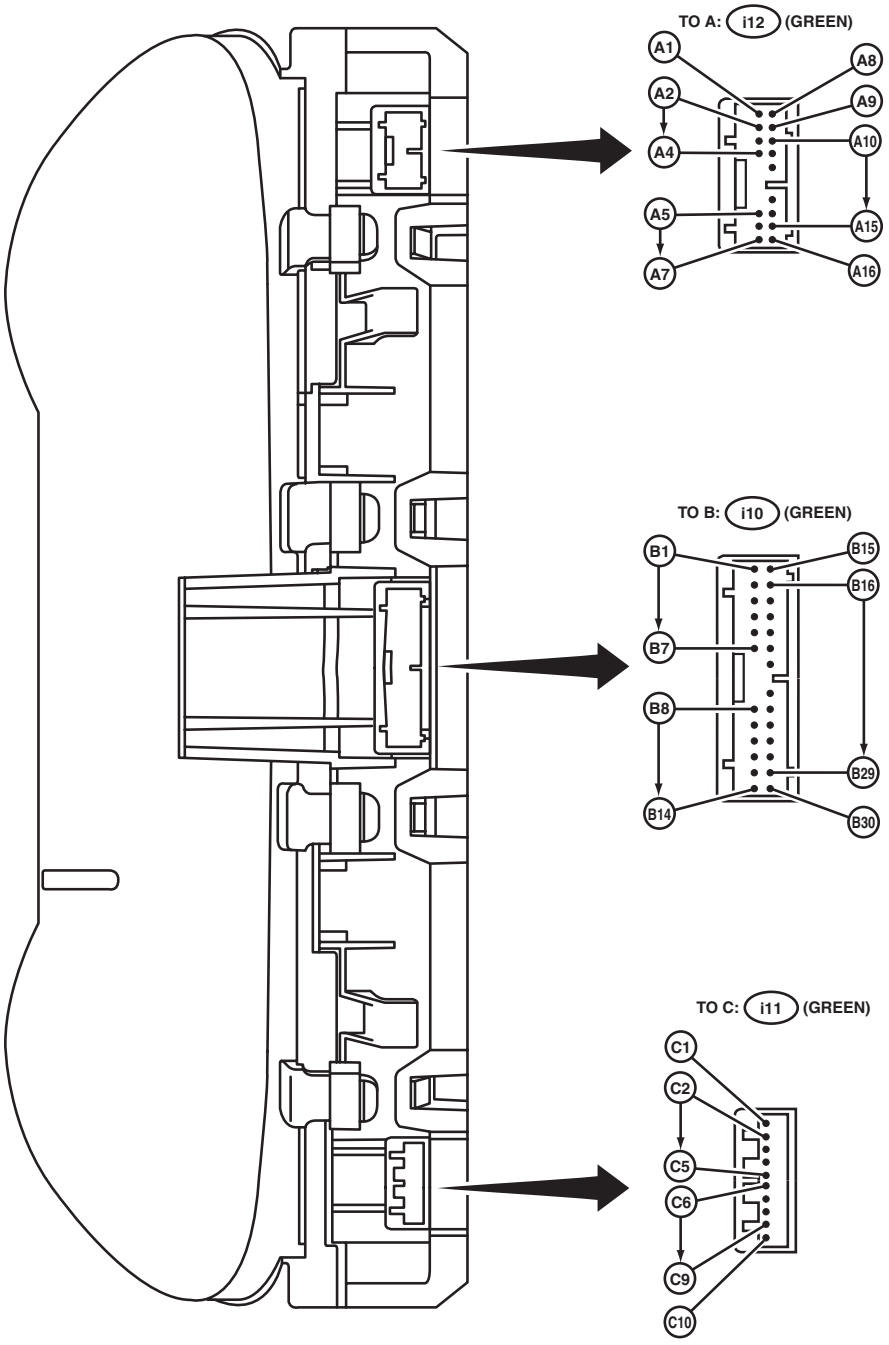

WI-15150

CM(ST)-01

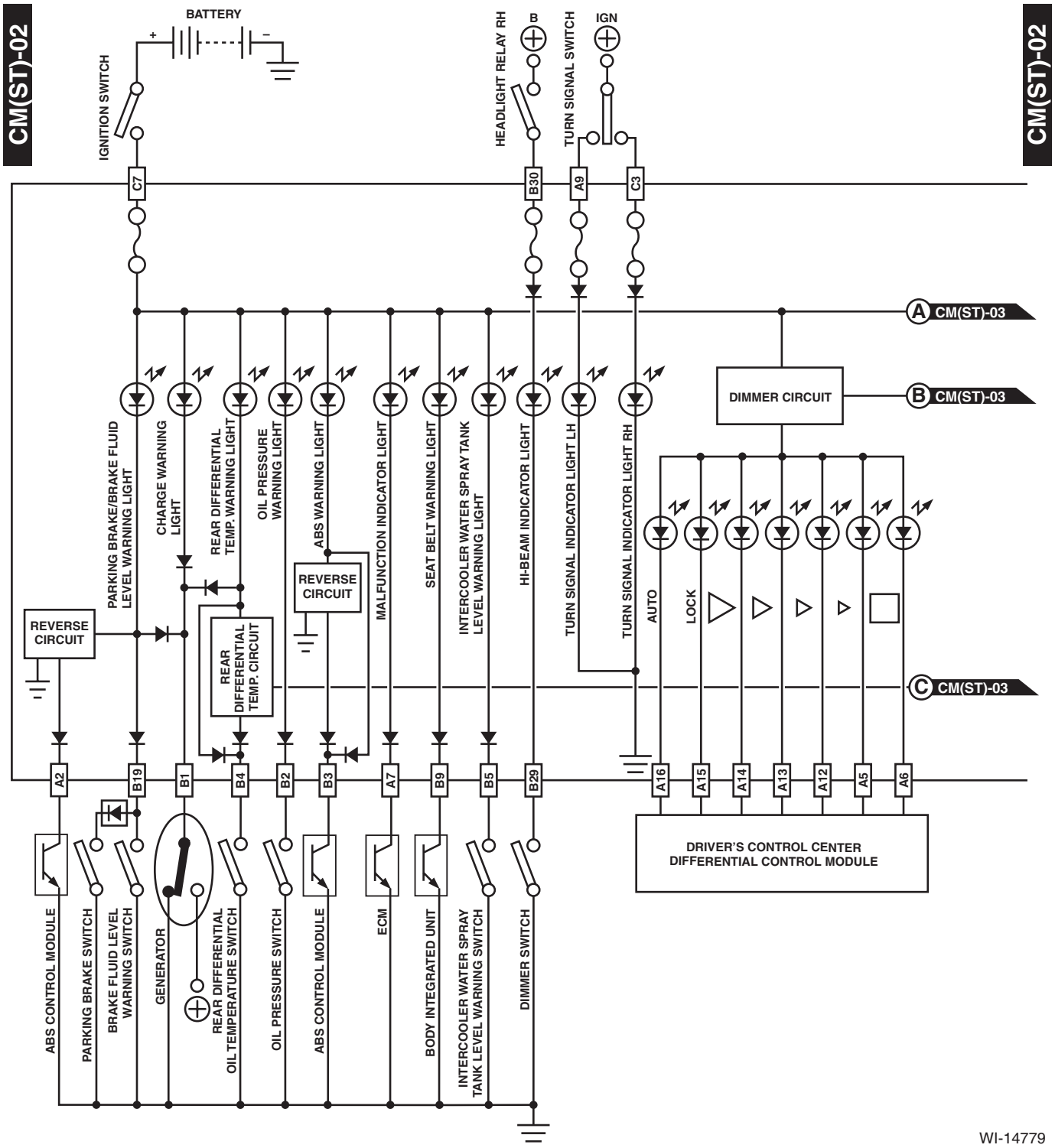
CM(ST)-02
BATTERY
IGNITION SWITCH
HEADLIGHT RELAY RH
B
TURN SIGNAL SWITCH
IGN
CM(ST)-02
C7
B30
A9
C3
A CM(ST)-03
B CM(ST)-03
C CM(ST)-03
DIMMER CIRCUIT
PARKING BRAKE/BRAKE FLUID LEVEL WARNING LIGHT
CHARGE WARNING LIGHT
REAR DIFFERENTIAL TEMP. WARNING LIGHT
OIL PRESSURE WARNING LIGHT
ABS WARNING LIGHT
MALFUNCTION INDICATOR LIGHT
SEAT BELT WARNING LIGHT
INTERCOOLER WATER SPRAY TANK LEVEL WARNING LIGHT
HI-BEAM INDICATOR LIGHT
TURN SIGNAL INDICATOR LIGHT LH
TURN SIGNAL INDICATOR LIGHT RH
AUTO
LOCK
REVERSE CIRCUIT
REAR DIFFERENTIAL TEMP. CIRCUIT
REVERSE CIRCUIT
A2
B19
B1
B4
B2
B3
A7
B9
B5
B29
A16
A15
A14
A13
A12
A5
A6
DRIVER'S CONTROL CENTER DIFFERENTIAL CONTROL MODULE
ABS CONTROL MODULE
PARKING BRAKE SWITCH
BRAKE FLUID LEVEL WARNING SWITCH
GENERATOR
REAR DIFFERENTIAL OIL TEMPERATURE SWITCH
OIL PRESSURE SWITCH
ABS CONTROL MODULE
ECM
BODY INTEGRATED UNIT
INTERCOOLER WATER SPRAY TANK LEVEL WARNING SWITCH
DIMMER SWITCH

WI-14779

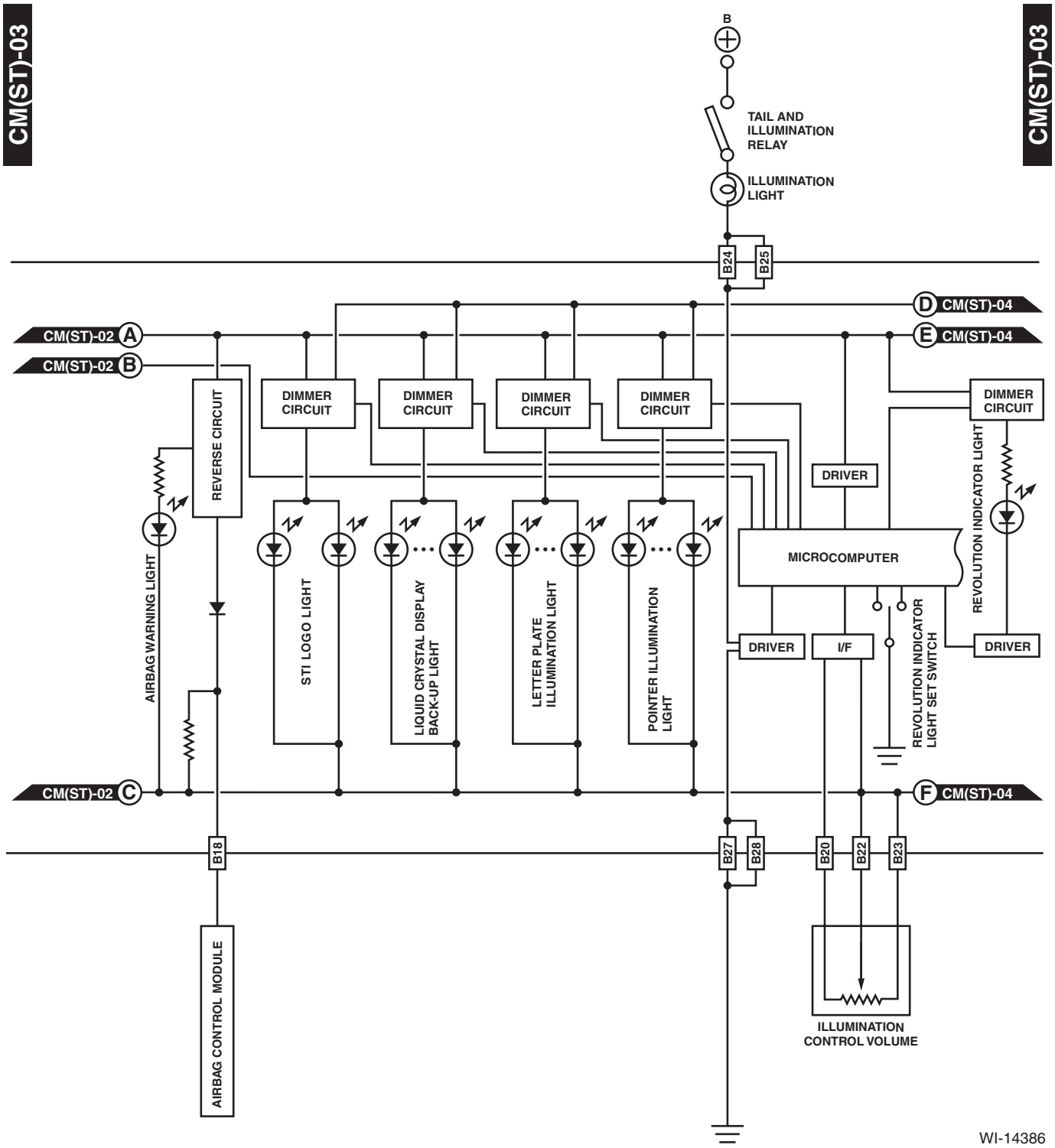
CM(ST)-03
CM(ST)-03
B
TAIL AND ILLUMINATION RELAY
ILLUMINATION LIGHT
B24
B25
D CM(ST)-04
E CM(ST)-04
CM(ST)-02 A
CM(ST)-02 B
DIMMER CIRCUIT
DIMMER CIRCUIT
DIMMER CIRCUIT
DIMMER CIRCUIT
DIMMER CIRCUIT
REVERSE CIRCUIT
DRIVER
REVOLUTION INDICATOR LIGHT
MICROCOMPUTER
AIRBAG WARNING LIGHT
STI LOGO LIGHT
LIQUID CRYSTAL DISPLAY BACK-UP LIGHT
LETTER PLATE ILLUMINATION LIGHT
POINTER ILLUMINATION LIGHT
DRIVER
I/F
REVOLUTION INDICATOR LIGHT SET SWITCH
DRIVER
CM(ST)-02 C
F CM(ST)-04
B18
B27
B28
B20
B22
B23
AIRBAG CONTROL MODULE
ILLUMINATION CONTROL VOLUME
WI-14386

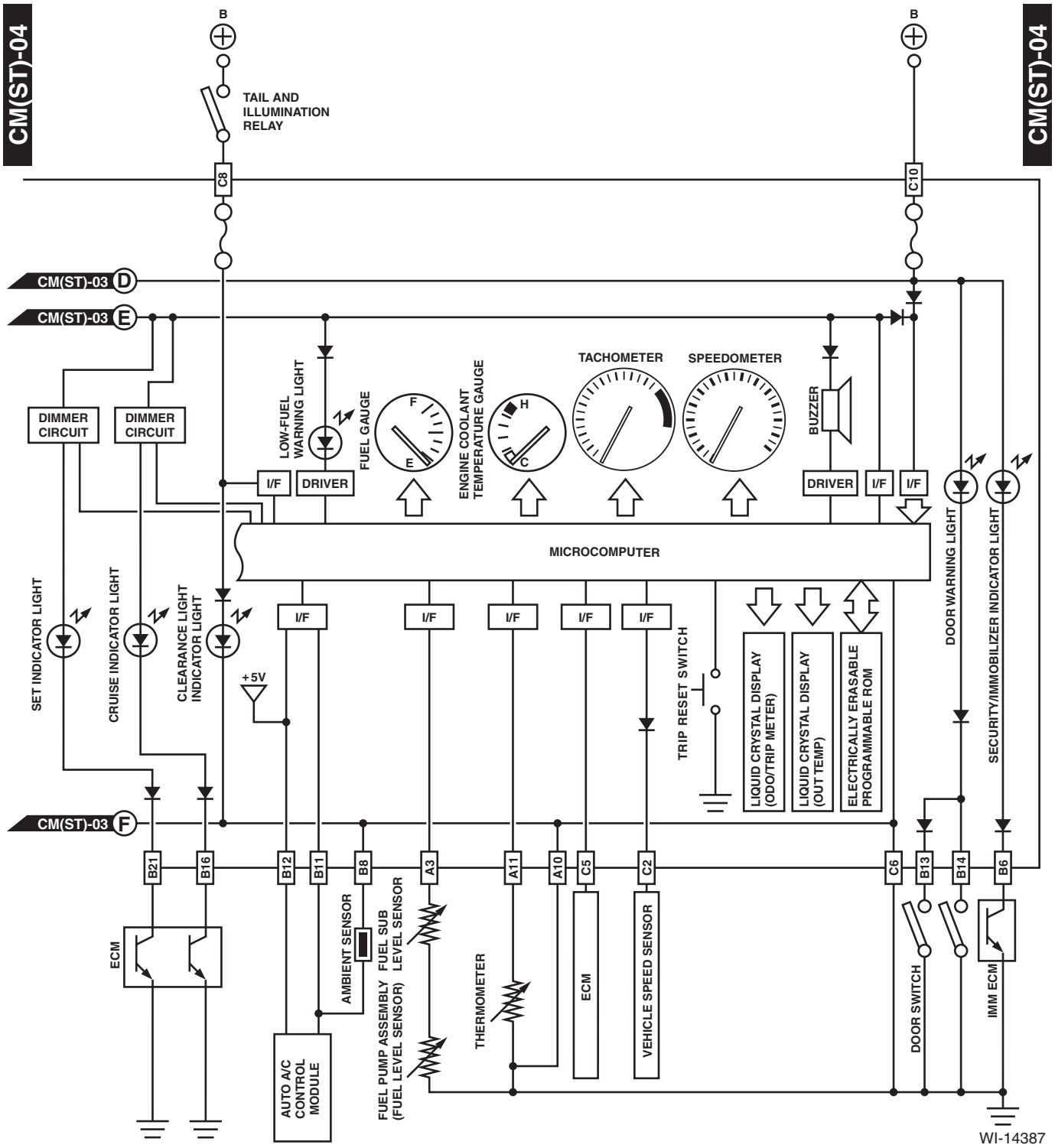
CM(ST)-04
B
TAIL AND ILLUMINATION RELAY
C8
C10
CM(ST)-03 D
CM(ST)-03 E
CM(ST)-03 F
DIMMER CIRCUIT
DIMMER CIRCUIT
LOW-FUEL WARNING LIGHT
FUEL GAUGE
F
E
ENGINE COOLANT TEMPERATURE GAUGE
H
C
TACHOMETER
SPEEDOMETER
BUZZER
I/F
DRIVER
MICROCOMPUTER
SET INDICATOR LIGHT
CRUISE INDICATOR LIGHT
CLEARANCE LIGHT INDICATOR LIGHT
+5V
TRIP RESET SWITCH
LIQUID CRYSTAL DISPLAY (ODO/TRIP METER)
LIQUID CRYSTAL DISPLAY (OUT TEMP)
ELECTRICALLY ERASABLE PROGRAMMABLE ROM
DOOR WARNING LIGHT
SECURITY/IMMOBILIZER INDICATOR LIGHT
B21
B16
B12
B11
B8
A3
A11
A10
C5
C2
C6
B13
B14
B6
ECM
AMBIENT SENSOR
FUEL SUB LEVEL SENSOR
FUEL PUMP ASSEMBLY (FUEL LEVEL SENSOR)
THERMOMETER
ECM
VEHICLE SPEED SENSOR
DOOR SWITCH
IMM ECM
AUTO A/C CONTROL MODULE
WI-14387